DISASSEMBLE IMPELLER

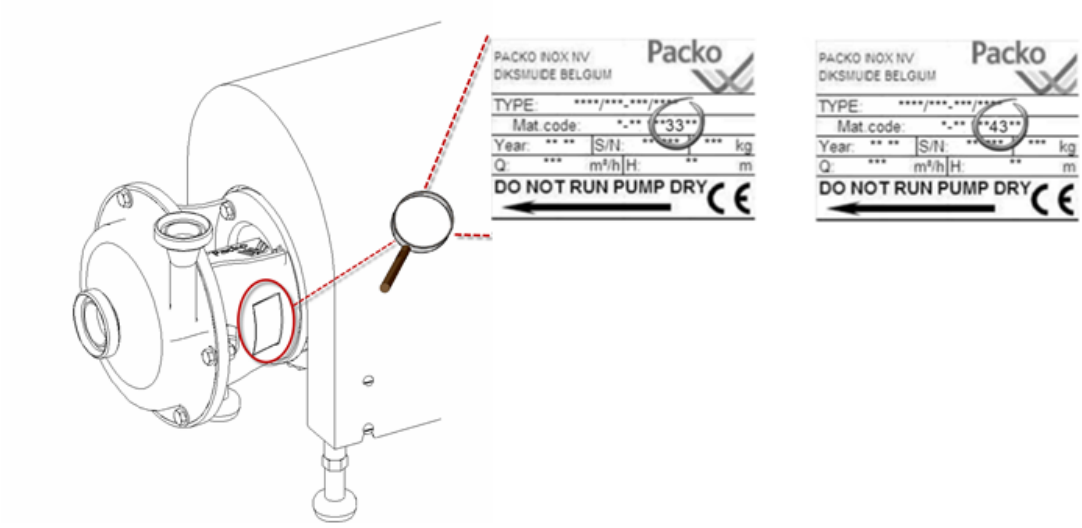

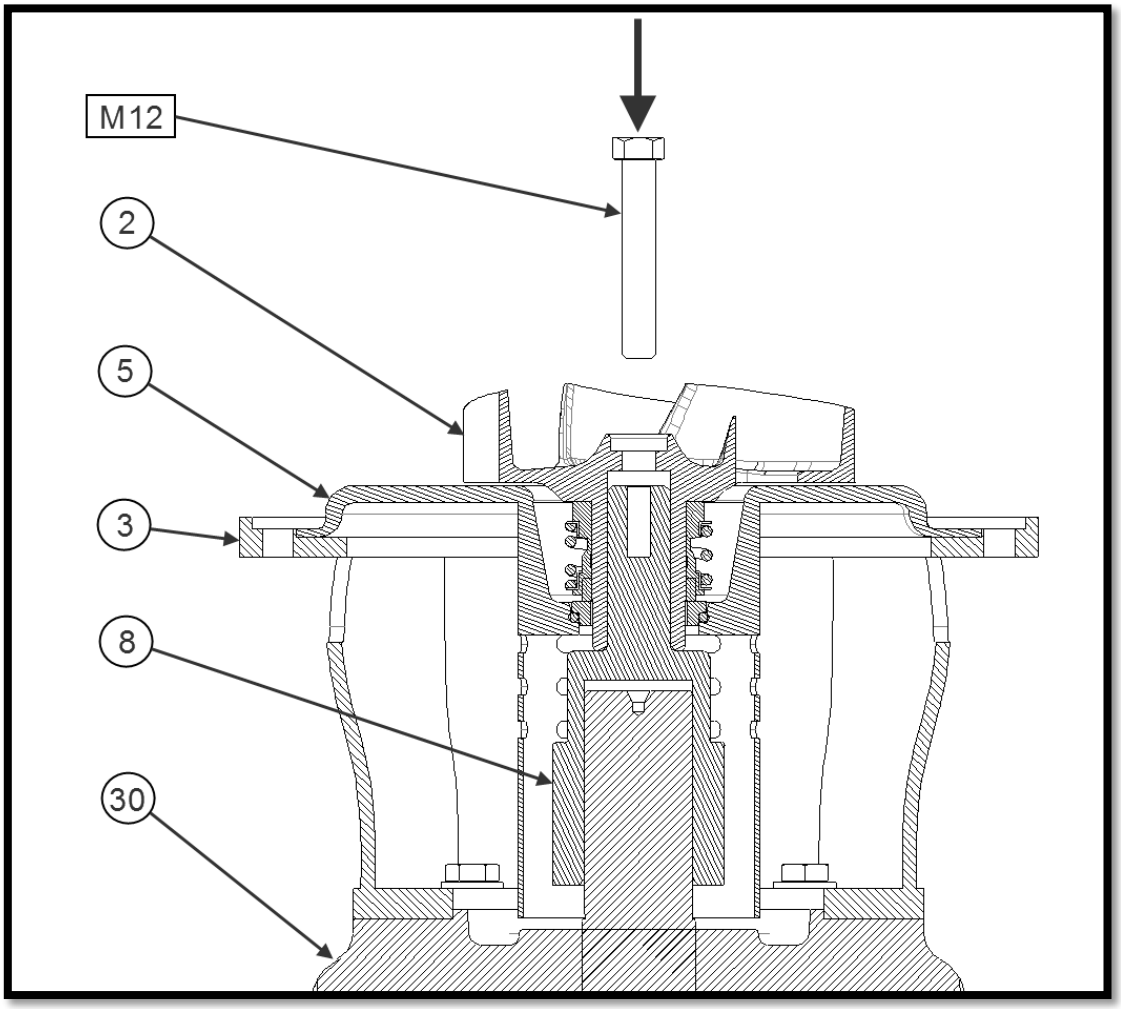

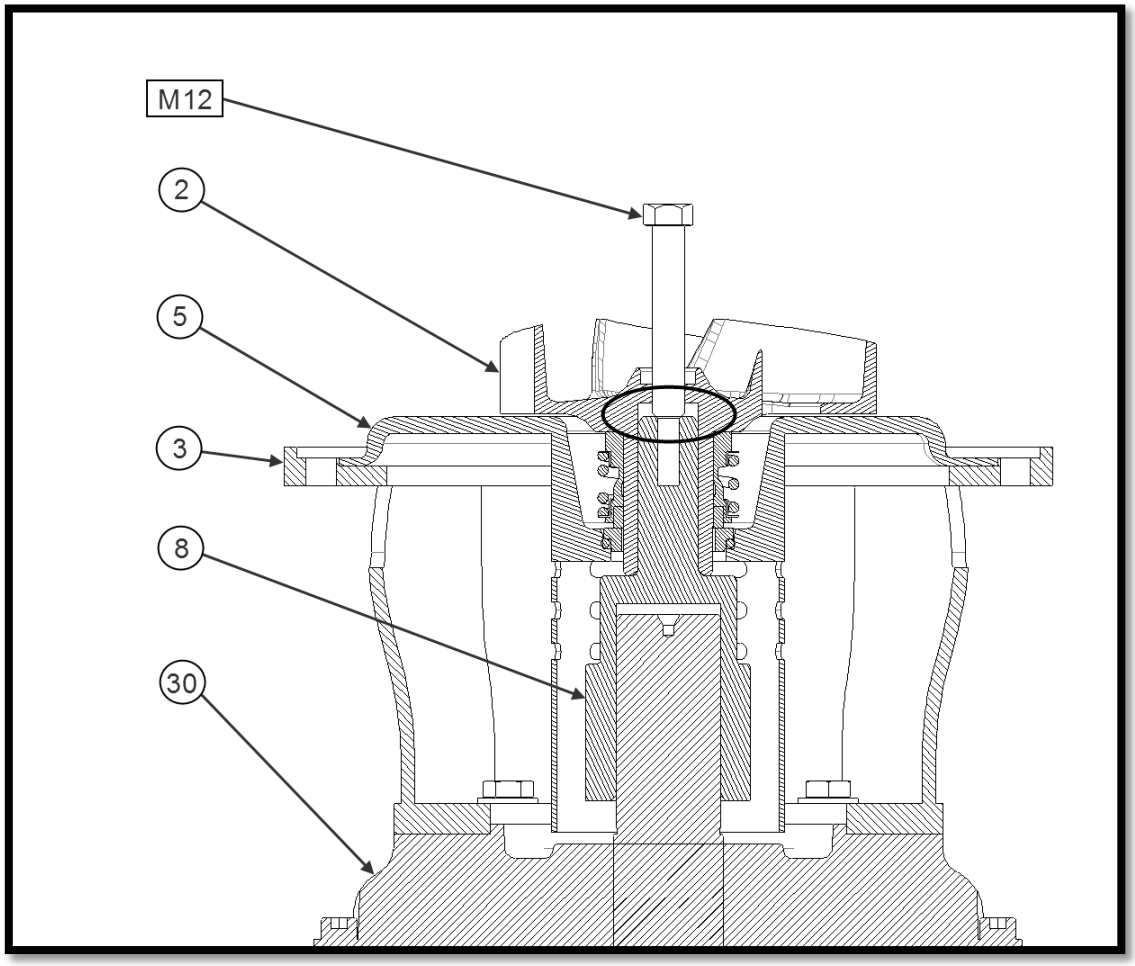
M12
2
5
3
8
30

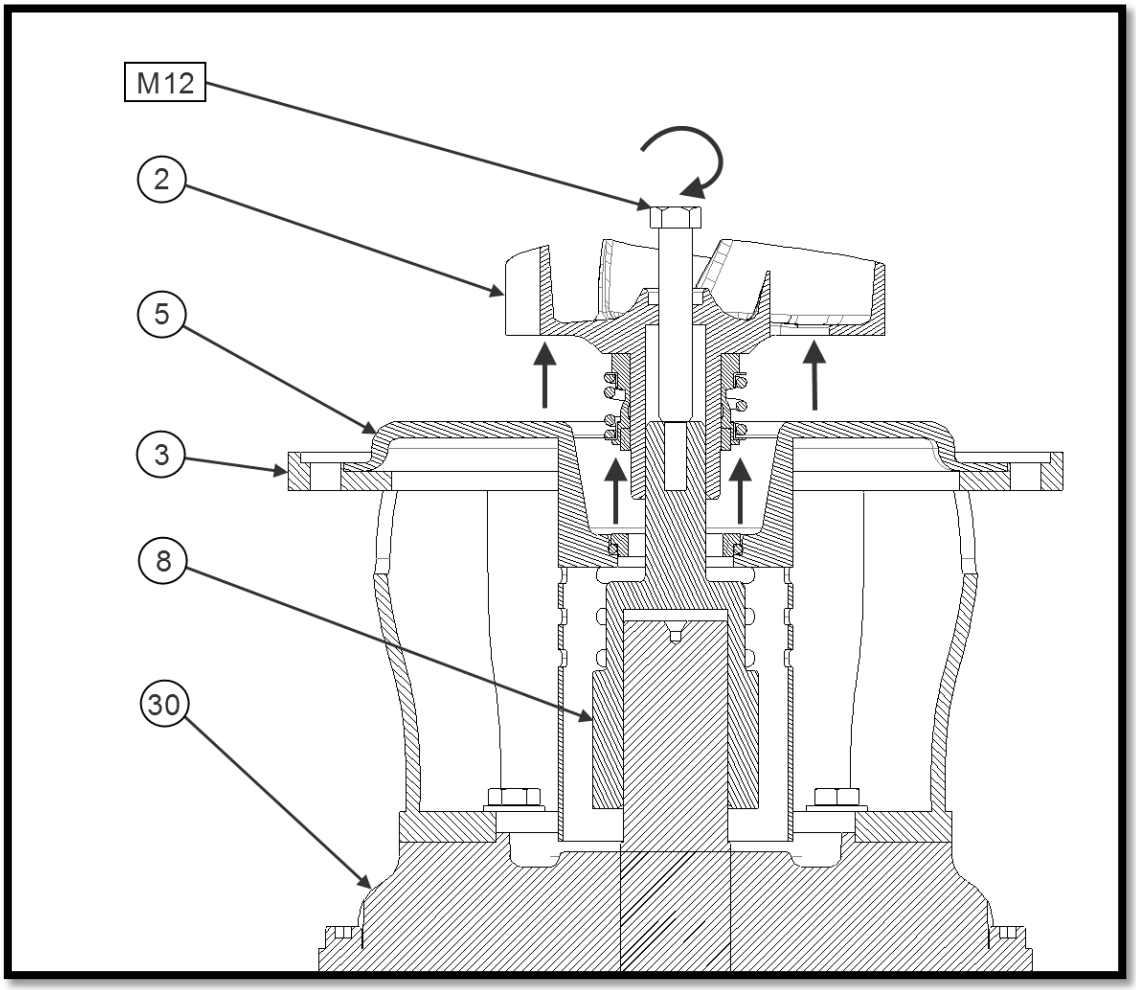
M12
2
5
3
8
30

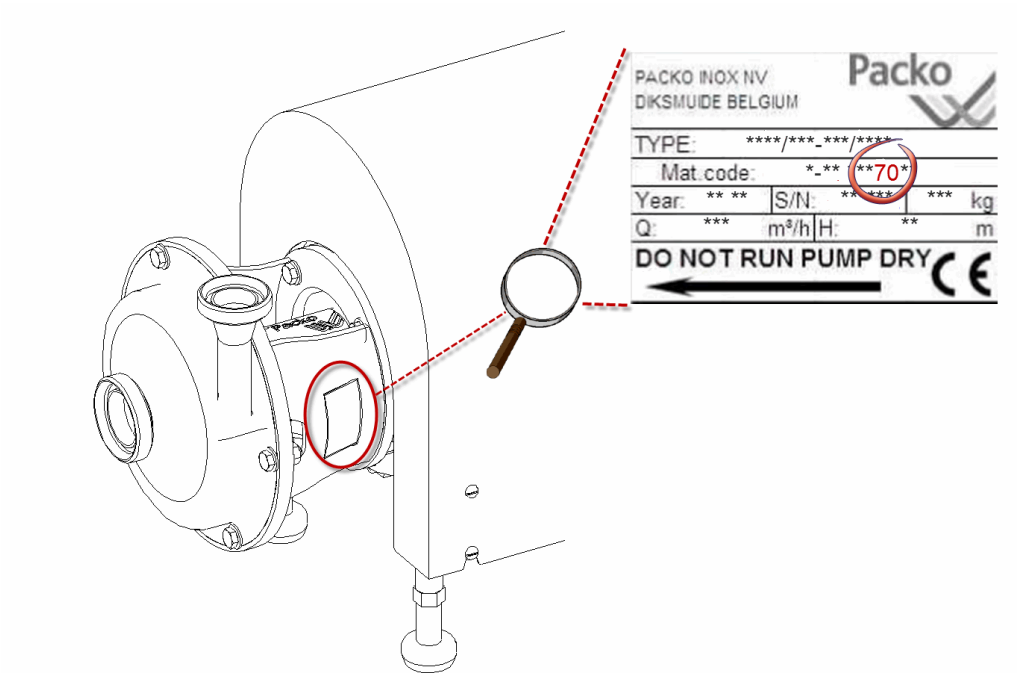
PACKO INOX NV
DIKSMUIDE BELGIUM
Packo
TYPE: ****/***-***/****
Mat.code: *-** **70*
Year: ** ** S/N: ** *** *** kg
Q: *** m³/h H: ** m
DO NOT RUN PUMP DRY

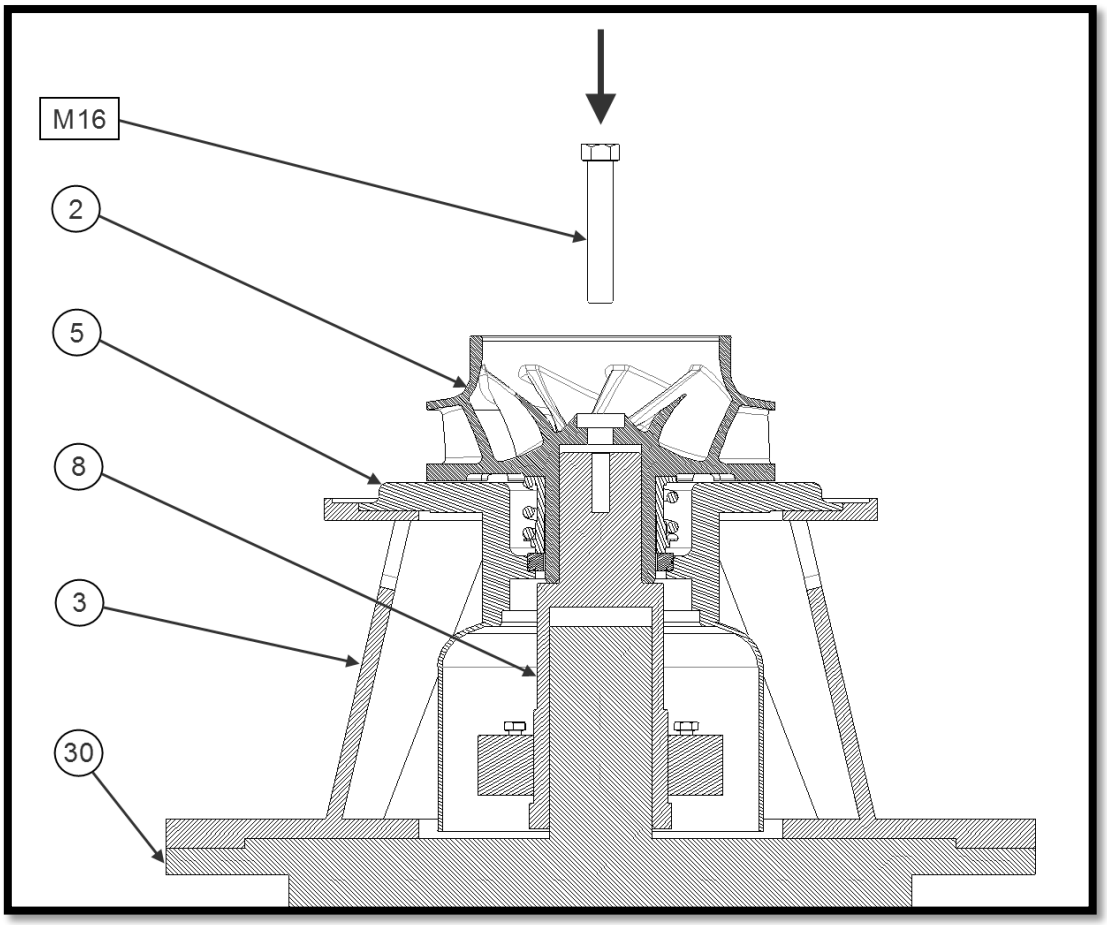
M16
2
5
8
3
30

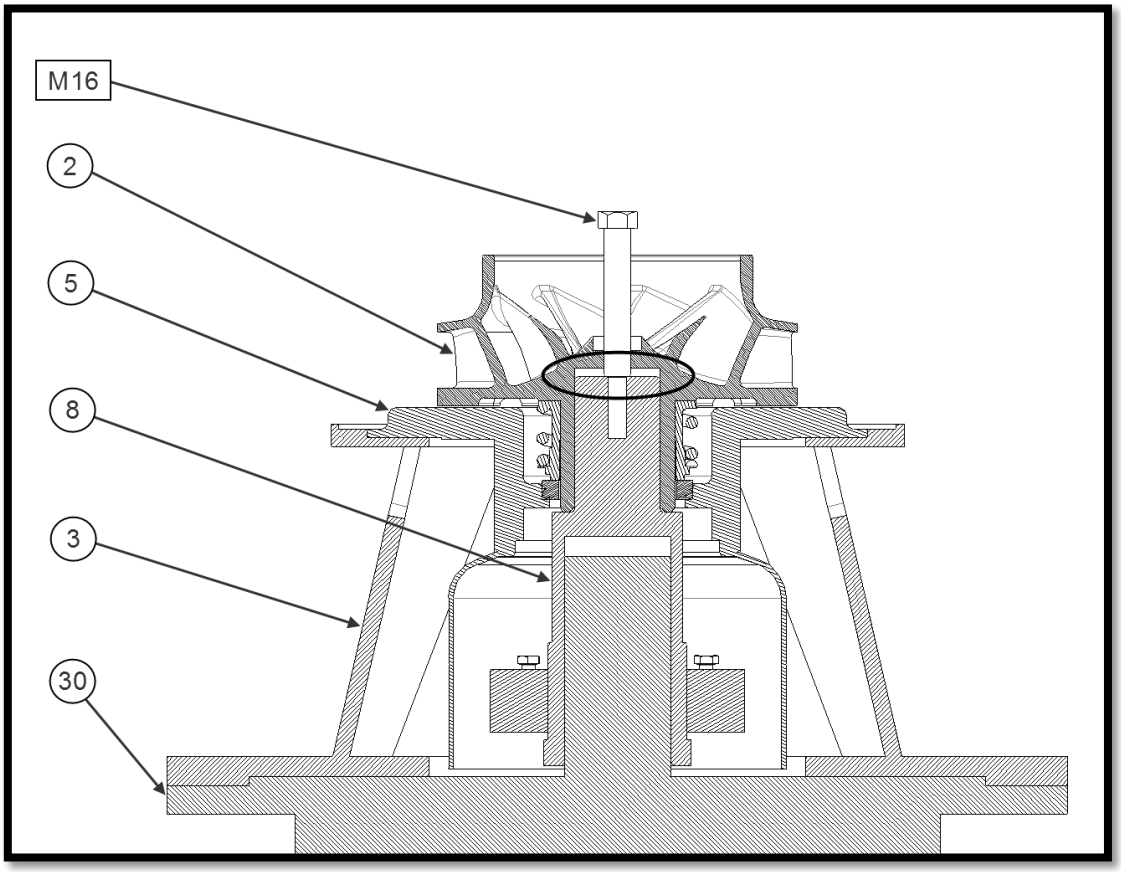
M16
2
5
8
3
30

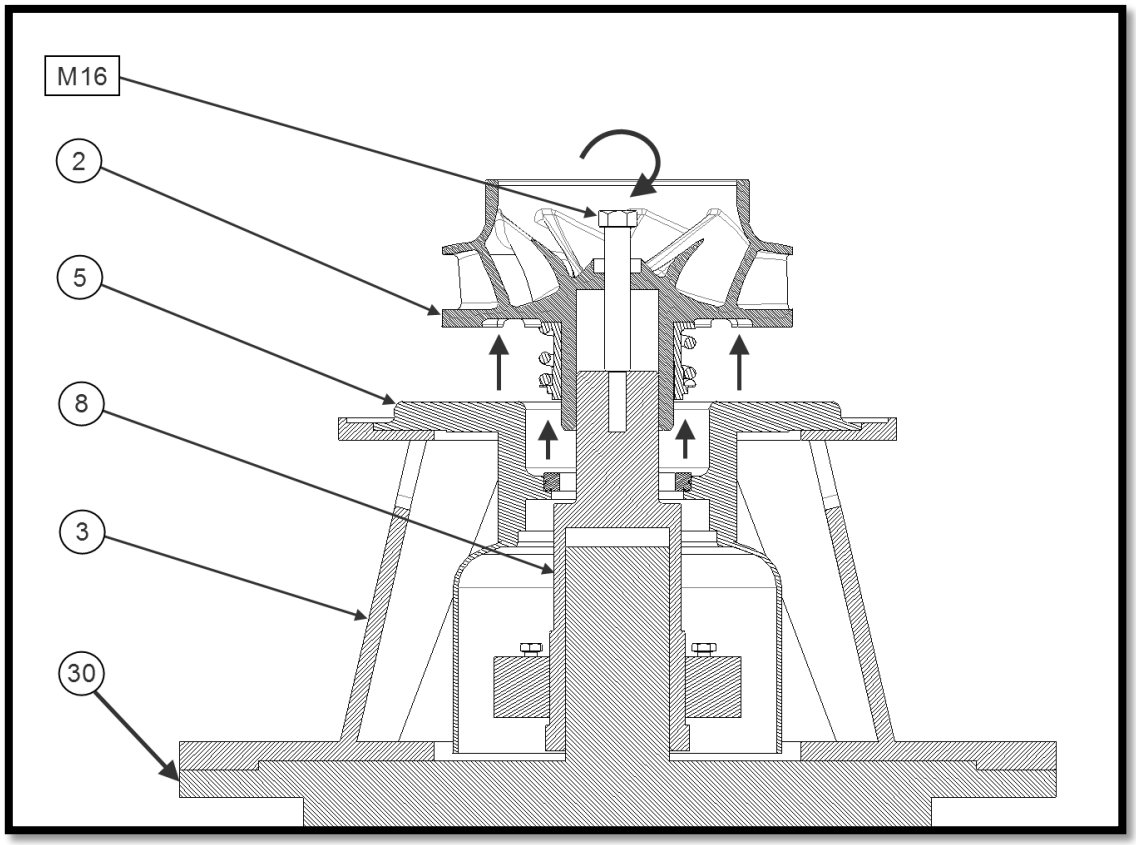
M16
2
5
8
3
30